Electrolux PROFESSIONAL

Modular Cooking Range Line 900XP 2-Hot Plates Electric Boiling Top

ITEM #

MODEL #

NAME #

SIS #

AIA #



391039 (E9ECED2Q00)	2-hot square plates (4 kW each) electric boiling top
391165 (E9ECED2Q0N)	2-hot plate (4 kW each) electric boiling top

Short Form Specification

Item No.

To be installed on open base installations, bridging supports or cantilever systems. Two 4 kW square cast-iron hot plates hermetically sealed to the one-piece top. Exterior panels of unit in stainless steel with Scotch Brite finish. Extra strength work top in heavy duty 2 mm stainless steel. Right-angled side edges to allow flush-fitting junction between units.

APPROVAL:

Main Features

- Unit to be mounted on open base cupboards, bridging supports or cantilever systems.
- The two 4kW cast-iron plates are hermtically sealed to the one-piece top. Hot plates with a power of 4kW for each plate.
- The special design of the control knob system guarantees against water infiltration.
- IPX5 water protection.
- Top configuration allows installation on ambient base only (not possible to install on refrigerated nor freezer base).
- Suitable for countertop installation.

Construction

- Unit is 930 mm deep to give a larger working surface area.
- All exterior panels in Stainless Steel with Scotch Brite finishing.
- AISI 304 stainless steel worktop, 2mm thick.
- Model has right-angled side edges to allow flush fitting joints between units, eliminating gaps and possible dirt traps.

Optional Accessories

• Pair of cast iron plate bars for electric cooking top	PNC 206056 ❑
• Junction sealing kit	PNC 206086 ❑
• Support for bridge type installation, 800mm	PNC 206137 ❑
• Support for bridge type installation, 1000mm	PNC 206138 ❑
• Support for bridge type installation, 1200mm	PNC 206139 ❑
• Support for bridge type installation, 1400mm	PNC 206140 ❑
• Support for bridge type installation, 1600mm	PNC 206141 ❑
• Support for bridge type installation, 400mm	PNC 206154 ❑
• Water column with swivel arm (water column extension not included)	PNC 206289 ❑
• Water column extension for 900 line	PNC 206290 ❑
• Chimney upstand, 400mm	PNC 206303 ❑
• Back handrail 800 mm	PNC 206308 ❑
• Back handrail 1200 mm	PNC 206309 ❑
• Chimney grid net, 400mm (700XP/900)	PNC 206400 ❑
• Side handrail-right/left hand (900XP)	PNC 216044 ❑
• Frontal handrail, 400mm	PNC 216046 ❑

• Frontal handrail, 800mm	PNC 216047	❑
• Frontal handrail, 1200mm	PNC 216049	❑
• Frontal handrail, 1600mm	PNC 216050	❑
• Large handrail - portioning shelf, 400mm	PNC 216185	❑
• Large handrail - portioning shelf, 800mm	PNC 216186	❑
• 2 side covering panels for top appliances	PNC 216278	❑
• 1x1/1GN basket for 40lt pasta cookers (only for 391039)	PNC 927216	❑
• Upper support frame to hold 6 round baskets for 40lt pasta cookers (alternative to 927219 for 6 round baskets) (only for 391165)	PNC 960644	❑

The company reserves the right to make modifications to the products without prior notice. All information correct at time of printing.

Modular Cooking Range Line 900XP 2-Hot Plates Electric Boiling Top

Front

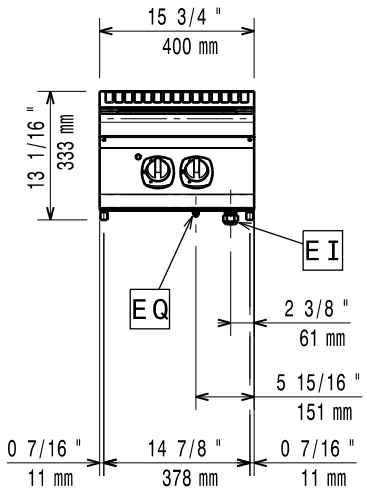

Side

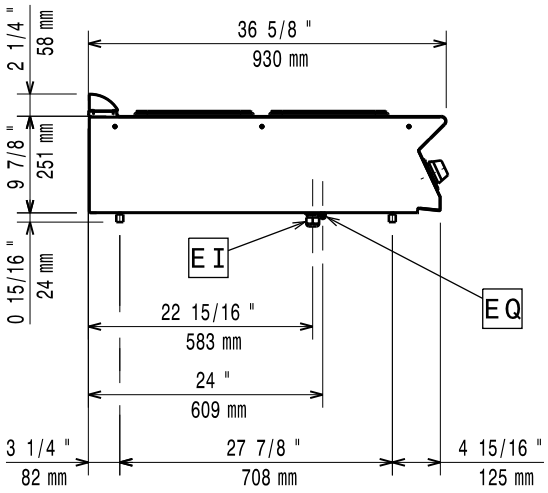

EI = Electrical inlet (power)
EQ = Equipotential screw

Top

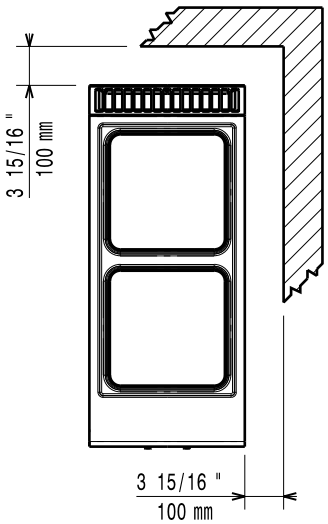

Electric

Supply voltage:	
391039 (E9ECED2Q00)	380-400 V/3 ph/50-60 Hz
391165 (E9ECED2Q0N)	230 V/3 ph/50/60 Hz
Total Watts:	8 kW

Key Information:

Net weight:	35 kg
Shipping weight:	43 kg
Shipping height:	
391039 (E9ECED2Q00)	520 mm
391165 (E9ECED2Q0N)	540 mm
Shipping width:	460 mm
Shipping depth:	1020 mm
Shipping volume:	
391039 (E9ECED2Q00)	0.24 m³
391165 (E9ECED2Q0N)	0.25 m³
[NOT TRANSLATED]	
391039 (E9ECED2Q00)	EH92T
391165 (E9ECED2Q0N)	N9CE1
Front Plates Power:	4 - 0 kW
Back Plates Power:	4 - kW
Front Plates dimensions:	300x300
Back Plates dimensions:	300x300

If appliance is set up or next to or against temperature sensitive furniture or similar, a safety gap of approximately 150 mm should be maintained or some form of heat insulation fitted.

The company reserves the right to make modifications to the products without prior notice. All information correct at time of printing.

2026.11.20